VISTA-MESH™ SECURITY FENCING

7650

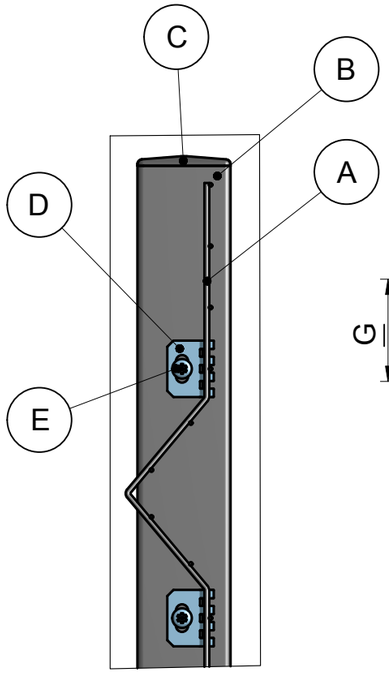

A
1:5

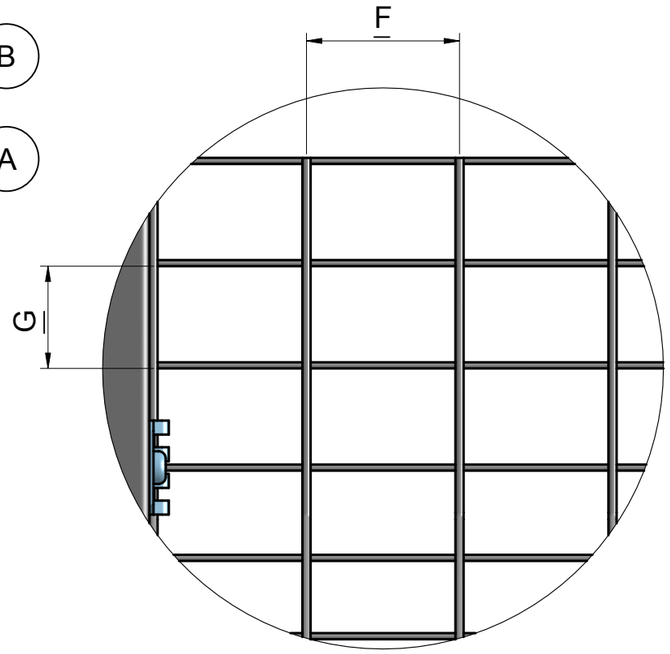

B
1:3

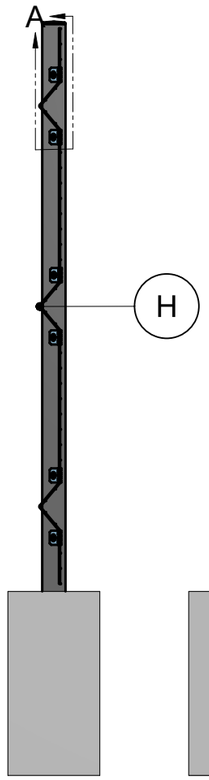

A - A
1:20

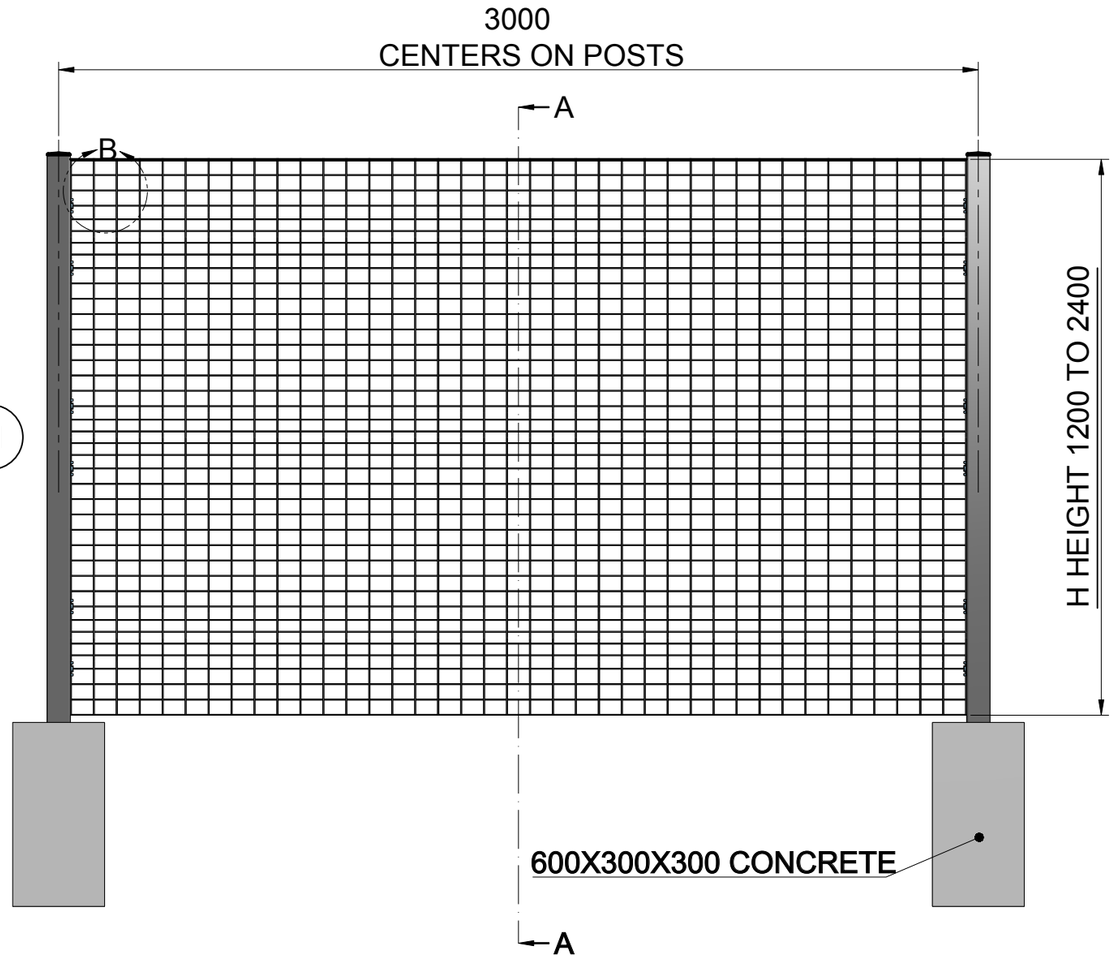

1:20

A	7650 Vista-Mesh Panel
B	Fence Post (See post options sheet)
C	Post Cap
D	Flat spider clamp
E	Security fastener to suit post type
F	76mm
G	50mm
H	Vista-Mesh panel bends

Available in three RAL colours or Hot Dip Galvanized

Green - RAL 6005

Anthracite - Ral 7016

Black - RAL 9005

Panel Width	Panel Height	Bends	Fixings Per Panel
2950mm	1200mm	2	8
2950mm	1800mm	3	12
2950mm	2100mm	3	12
2950mm	2400mm	4	16
2950mm	3000mm	5	20

Wire Thickness	Domestic	Industrial
Horizontal	3mm	4mm
Vertical	4mm	4mm

ACE SECURITY FENCING